GAUGE ISOLATOR - Panel Mounting | GI

Description

Seal type valve.

Swivelling gauge connection for easy gauge positioning.

Compact assembly.

Eliminates gauge supporting bracket.

Angular gauge face plane in Sub- Plate mounting construction facilitating easy gauge reading.

Section

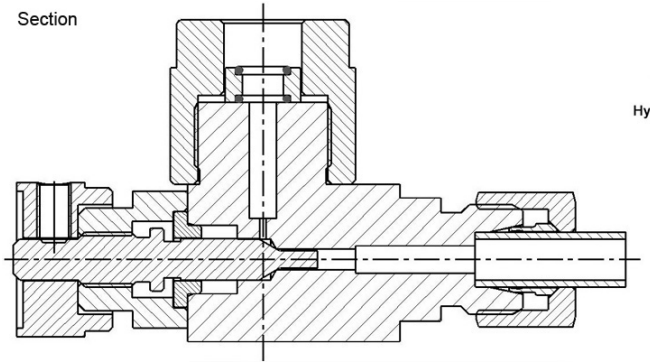

Hydraulic symbol

Unit Dimension

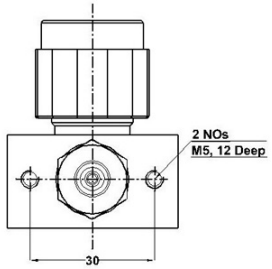

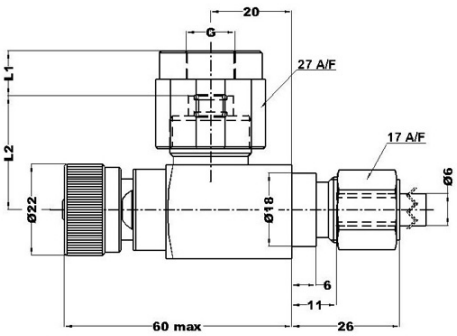

Part#	G	L1	L2
GI-PM-G 1/4	G 1/4	10.5	27.50
GI-PM-G 3/8	G 3/8	10.5	28.00
GI-PM-G 1/2	G 1/2	10.5	28.00

Technical Specification

Construction----Seat type

Mounting----Sub-Plate mounting interface / Panel mounting (Threaded body)

Interface Standard----Factory Standard.

Mounting Position----Optional.

Operating Pressure----350 bar.

Hydraulic medium----Mineral oil.

Viscosity range----10 cSt to 380 cSt.

Fluid temperature range ---- -20Â° C to +70Â° C.

Fluid cleanliness requirement----As per ISO 19/16 or better.

Mass----0.3 kg.

GAUGE ISOLATOR - Sub-Plate Mounting Valve | GI-SPM

Description Seal type valve.

Swivelling gauge connection for easy gauge positioning.

Compact assembly.

Eliminates gauge supporting bracket.

Angular gauge face plane in Sub-Plate mounting construction facilitating easy gauge readin

Section

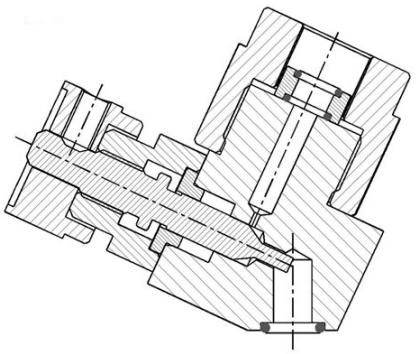

Hydraulic Symbol

Unit Dimension

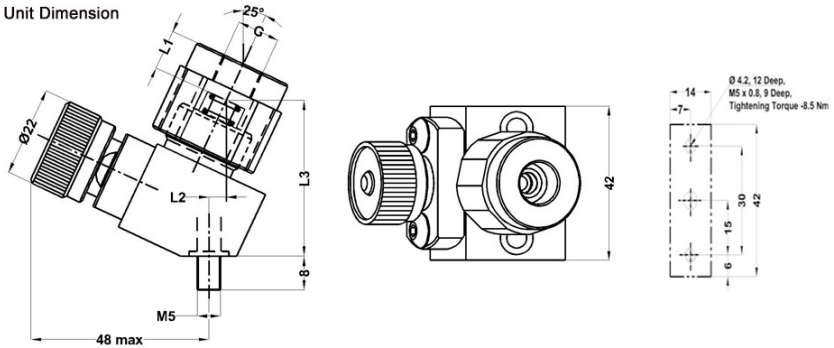

Part#	G	L1	L2	L3
GI-SPM-G1/4	G1/4	10.5	4.0	38.5
GI-SPM-G3/8	G3/8	10.5	4.0	39.0
GI-SPM-G1/2	G1/2	12.5	4.0	39.0

Technical Specification

Construction ---- Seat type

Mounting ---- Sub-Plate mounting interface / Panel mounting

Interface Standard----Factory Standard.

Mounting Position ----Optional.

Operating Pressure----350 bar.

Hydraulic medium----Mineral oil.

Viscosity range----10 cSt to 380 cSt.

Fluid temperature range---- -20Â° C to +70Â° C.

Fluid cleanliness requirement ---- As per ISO 19/16 or better.

Mass----0.3 kg.

HYDROMATIK
connections par excellence

Valves

NEEDLE VALVE - INLINE | NV

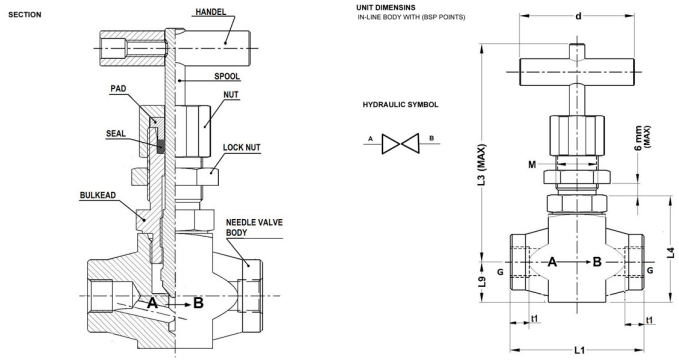

PART # IN-LINE	G	L1	L3	L4	L9	d	t1	S	M
NV 1/4" BSP	G 1/4	70	110.5	54.5	21.0	64	14	30	M22X1.5
NV 3/8" BSP	G 3/8	70	110.5	54.5	21.0	64	14	30	M22X1.5
NV 1/2" BSP	G 1/2	77	110.5	54.5	21.0	64	17	30	M22X1.5
NV 3/4" BSP	G 3/4	93	122.0	71.0	27.0	84	17	36	M26X1.5
NV 1" BSP	G 1	93	122.0	72.0	27.0	84	18	46	M26X1.5
NV 1,1/4" BSP	G 1-1/4	162	162.0	105.0	51.5	120	22	60	M42X2.0
NV 1,1/2" BSP	G 1-1/2	162	162.0	105.0	51.5	120	24	60	M42X2.0

HYDROMATIK
connections par excellence

Valves

RHD | RHD

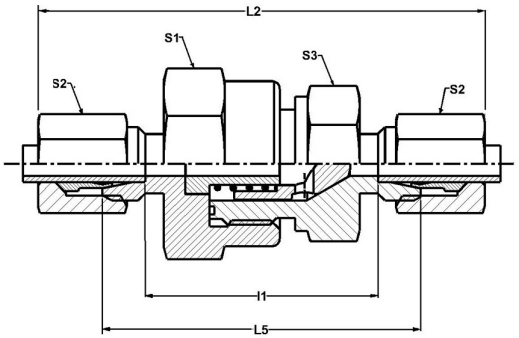

Type Designation	SERIES	PN bar(psi)	Tube OD	kg per 100St. Kg per 100pcs. Kg par 100p.	L2	L5	l1	S1	S2	S3	Ã˜entspr. Durchla beta Ã˜outlet Ã˜de passage correspondant
RHD 6 L	L	400(5801)	6	12.0	67	52	38	22	14	27	4.0
RHD 8 L	L	400(5801)	8	12.5	67	52	38	22	17	27	6.0
RHD 10 L	L	400(5801)	10	11.5	67	52	38	22	19	27	7.5
RHD 12 L	L	400(5801)	12	12.5	68	53	39	22	22	27	7.5
RHD 15 L	L	400(5801)	15	18.5	74	58	44	27	27	32	11.0
RHD 18 L	L	400(5801)	18	23.0	80	63	48	27	32	32	11.0

RHD 22 L	L	250(3626)	22	51.1	92	75	60	41	36	46	18.5
RHD 28 L	L	250(3626)	28	57.0	99	81	66	41	41	46	18.5
RHD 35 L	L	250(3626)	35	130.5	114	92	71	60	50	70	29.0
RHD 42 L	L	250(3626)	42	123.4	101	87	65	60	60	70	29.0
RHD 6 S	S	400(5801)	6	13.0	71	56	42	22	17	27	4.0
RHD 8 S	S	400(5801)	8	12.0	67	52	38	22	19	27	5.0
RHD 10 S	S	400(5801)	10	13.0	71	54	39	22	22	27	7.0
RHD 12 S	S	400(5801)	12	14.0	72	55	40	22	24	27	7.5
RHD 14 S	S	400(5801)	14	18.5	81	62	46	27	27	32	10.0
RHD 16 S	S	400(5801)	16	22.0	84	65	48	27	30	32	11.0
RHD 20 S	S	400(5801)	20	66.2	100	78	57	41	36	46	16.0
RHD 25 S	S	250 (3626)	25	53.0	105	81	57	41	46	46	18.5
RHD 30 S	S	250(3626)	30	81.0	117	91	64	50	50	55	24.0
RHD 38 S	S	250(3626)	38	136.8	128	99	67	60	60	70	29.0

HYDROMATIK
connections par excellence

Valves

RHV-M-ED | RHV-M-ED

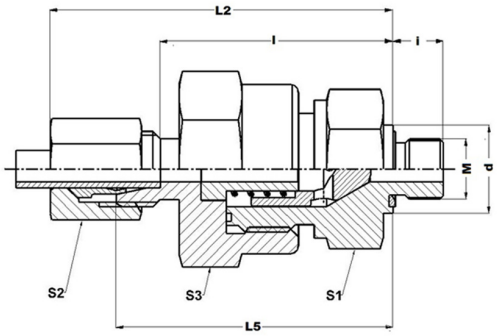

Type Designation	SERIES	PN bar(psi)	Tube OD	G	kg per 100St. Kg per 100pcs. Kg par 100p.	d	L2	L5	l	i	S1	S2	S3	Ã˜entspr. Durchla beta Ã˜outlet Ã˜de passage correspondant
RHV 6 LM-ED	L	400(5801)	6	M10X1	12.0	13.9	50.5	43	36	8	22	14	27	4.0
RHV 8 LM-ED	L	400(5801)	8	M12X1.5	12.1	16.9	50.5	43	36	12	22	17	27	6.0
RHV 10 LM-ED	L	400(5801)	10	M14X1.5	11.0	18.9	48.5	41	34	12	22	19	27	7.0
RHV 12 LM-ED	L	400(5801)	12	M16X1.5	14.0	21.9	53.5	46	39	12	22	22	27	7.5
RHV 15 LM-ED	L	400(5801)	15	M18X1.5	18.0	23.9	56.0	48	41	12	27	27	32	11.0
RHV 18 LM-ED	L	400(5801)	18	M22X1.5	23.0	29.9	61.5	53	45.5	14	27	32	32	11.0

RHV 22 M-ED	L	250(3626)	22	M26X1.5	47.0	31.9	69.5	61	53.5	16	41	36	46	18.0
RHV 28 LM-ED	L	250(3626)	28	M33X2	52.5	39.9	77.0	68	60.5	18	41	41	46	18.5
RHV 35 LM-ED	L	250(3626)	35	M42X2	132.0	49.9	88.5	77.5	67	20	60	50	70	29.0
RHV 42 LM-ED	L	250(3626)	42	M48X2	140.0	54.9	87.5	75.5	64.5	22	60	60	70	29.0
RHV 6 SM-ED	S	400(5801)	6	M12X1.5	13.0	16.9	52.5	45	38	12	22	17	27	4.0
RHV 8 SM-ED	S	400(5801)	8	M14X1.5	11.9	18.9	50.5	43	36	12	22	19	27	5.0
RHV 10 SM-ED	S	400(5801)	10	M16X1.5	13.5	21.9	53.5	45	37.5	12	22	22	27	7.0
RHV 12 SM-ED	S	400(5801)	12	M18X1.5	15.5	23.9	55.5	47	39.5	12	24	24	27	7.5
RHV 14 SM-ED	S	400(5801)	14	M20X1.5	19.5	25.9	59.5	50	42	14	27	27	32	10.0
RHV 16 SM-ED	S	400(5801)	16	M22X2	23.0	26.9	62.5	53	44.5	14	27	30	32	11.0
RHV 20 SM-ED	S	400(5801)	20	M27X2	47.0	31.9	74.0	63	52.5	16	41	36	46	16.0
RHV 25 SM-ED	S	250 (3626)	25	M33X2	54.0	39.9	77.0	65	53	18	41	46	46	18.5
RHV 30 SM-ED	S		30	M42X2	86.0	49.9	87.0	74	60.5	20	50	50	55	24.0
RHV 38 SM-ED	S		38	M48X2	143.5	54.9	96.0	81.5	65.5	22	60	60	70	29.0

HYDROMATIK
connections par excellence

Valves

RHV-R-ED | RHV-R-ED

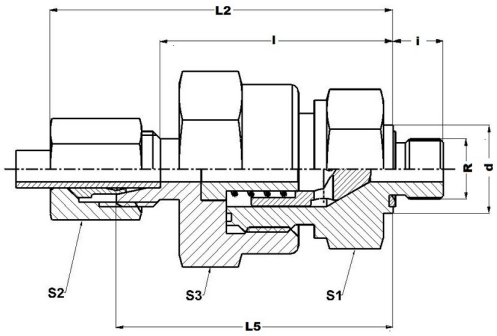

Type Designation	SERIES	PN bar(psi)	Tube OD	G	kg per 100St. Kg per 100pcs. Kg par 100p.	d	L2	L5	l	i	S1	S2	S3	Ã˜entspr. Durchla beta Ã˜outlet Ã˜de passage correspondant
RHV 6 LR-ED	L	400(5801)	6	G 1/8 A	12.0	13.9	50.5	43	36	8	22	14	27	4.0
RHV 8 LR-ED	L	400(5801)	8	G 1/4 A	12.0	18.9	50.5	43	36	12	22	17	27	6.0
RHV 10 LR-ED	L	400(5801)	10	G 1/4 A	11.5	18.9	48.5	41	34	12	22	19	27	6.0
RHV 12 LR-ED	L	400(5801)	12	G 3/8 A	14.0	21.9	53.5	46	39	12	22	22	27	7.5
RHV 15 LR-ED	L	400(5801)	15	G 1/2 A	19.0	26.9	56	48	41	14	27	27	32	11.0
RHV 18 LR-ED	L	400(5801)	18	G 1/2 A	23.0	26.9	61.5	53	45.5	14	27	32	32	11.0

RHV 22 LR-ED	L	250(3626)	22	G 3/4 A	47.0	31.9	69.5	61	53.5	16	41	36	46	18.0
RHV 28 LR-ED	L	250(3626)	28	G 1 A	52.5	39.9	77	68	60.5	18	41	41	46	20.0
RHV 35 LR-ED	L	250(3626)	35	G 1 1/4 A	137.0	49.9	88.5	77.5	67	20	60	50	70	29.0
RHV 42 LR-ED	L	250(3626)	42	G 1 1/2 A	140.0	54.9	87.5	75.5	64.5	22	60	60	70	29.0
RHV 6 SR-ED	S	400(5801)	6	G 1/4 A	13.0	18.9	52.5	45	38	12	22	17	27	4.0
RHV 8 SR-ED	S	400(5801)	8	G 1/4 A	12.0	18.9	50.5	43	36	12	22	19	27	5.0
RHV 10 SR-ED	S	400(5801)	10	G 3/8 A	13.5	21.9	53.5	45	37.5	12	22	22	27	7.5
RHV 12 SR-ED	S	400(5801)	12	G 3/8 A	14.5	21.9	55.5	47	39.5	12	22	24	27	7.5
RHV 14 SR-ED	S	400(5801)	14	G 1/2 A	19.5	26.9	59.5	50	42	14	27	27	32	10.0
RHV 16 SR-ED	S	400(5801)	16	G 1/2 A	23.0	26.9	62.5	53	44.5	14	27	30	32	11.0
RHV 20 SR-ED	S	400(5801)	20	G 3/4 A	59.5	31.9	74	63	52.5	16	41	36	46	16.0
RHV 25 SR-ED	S	250(3626)	25	G 1 A	54.0	33.9	77	65	53	18	41	46	46	20.0
RHV 30 SR-ED	S	250(3626)	30	G 1 1/4 A	86.0	49.9	87	74	60.5	20	50	50	55	24.0
RHV 38 SR-ED	S	250(3626)	38	G 1 1/2 A	144.1	54.9	96	81.5	65.5	22	60	60	70	29.0

HYDROMATIK
connections par excellence

Valves

RHZ-M-ED | RHZ-M-ED

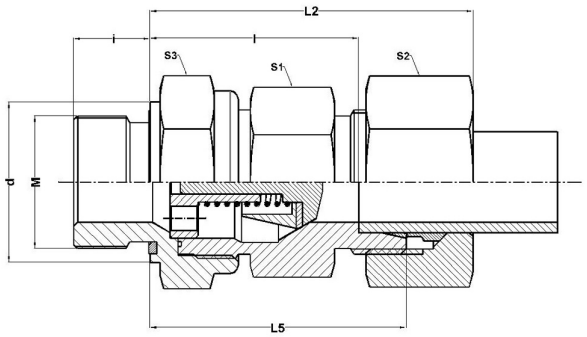

Type Designation	SERIES	PN bar(psi)	Tube OD	G	kg per 100St. Kg per 100pcs. Kg par 100p.	d	L2	L5	l	i	S1	S2	S3	Ã˜entspr. Durchla beta Ã˜outlet Ã˜de passage correspondant
RHZ 6 LM-ED	L	400(5801)	6	M10X1	12.0	13.9	50.5	43	36	8	22	14	27	4.0
RHZ 8 LM-ED	L	400(5801)	8	M12X1.5	12.1	16.9	50.5	43	36	12	22	17	27	6.0
RHZ 10 LM-ED	L	400(5801)	10	M14X1.5	11.0	18.9	48.5	41	34	12	22	19	27	7.0
RHZ 12 LM-ED	L	400(5801)	12	M16X1.5	14.0	21.9	53.5	46	39	12	22	22	27	7.5
RHZ 15 LM-ED	L	400(5801)	15	M18X1.5	18.5	21.9	56	48	41	12	27	27	32	11.0
RHZ 18 LM-ED	L	400(5801)	18	M22X1.5	23.0	26.9	61.5	53	45.5	14	27	32	32	11.0

RHZ 22 M-ED	L	250 (3626)	22	M26X1.5	47.0	31.9	70.5	62	54.5	16	46**	36	41**	18.0
RHZ 28 LM-ED	L	250 (3626)	28	M33X2	52.5	39.9	71	62	54.5	18	46**	41	41**	20.0
RHZ 35 LM-ED	L	250 (3626)	35	M42X2	132.0	49.9	88.5	77.5	67	20	60	50	70	29.0
RHZ 42 LM-ED	L	250 (3626)	42	M48X2	140.0	54.9	87.5	75.5	64.5	22	60	60	70	29.0
RHZ 6 SM-ED	S	400(5801)	6	M12X1.5	13.0	16.9	52.5	45	38	12	22	17	27	4.0
RHZ 8 SM-ED	S	400(5801)	8	M14X1.5	11.9	18.9	50.5	43	36	12	22	19	27	5.0
RHZ 10 SM-ED	S	400(5801)	10	M16X1.5	13.5	21.9	53.5	45	37.5	12	22	22	27	7.0
RHZ 12 SM-ED	S	400(5801)	12	M18X1.5	14.5	23.9	55.5	47	39.5	12	24	24	27	7.5
RHZ 14 SM-ED	S	400(5801)	14	M20X1.5	19.5	25.9	59.5	50	42	14	27	27	32	10.0
RHZ 16 SM-ED	S	400(5801)	16	M22X2	23.0	26.9	62.5	53	44.5	14	27	30	32	11.0
RHZ 20 SM-ED	S	400(5801)	20	M27X2	47.0	31.9	73	62	51.5	16	46**	36	41**	16.0
RHZ 25 SM-ED	S	250 (3626)	25	M33X2	54.0	39.9	77	65	53	18	46**	46	41**	18.5
RHZ 30 SM-ED	S		30	M42X2	86.0	49.9	87	74	60.5	20	50	50	55	24.0
RHZ 38 SM-ED	S		38	M48X2	143.5	54.9	96	81.5	65.5	22	60	60	70	29.0

HYDROMATIK
connections par excellence

Valves

RHZ-R-ED | RHZ-R-ED

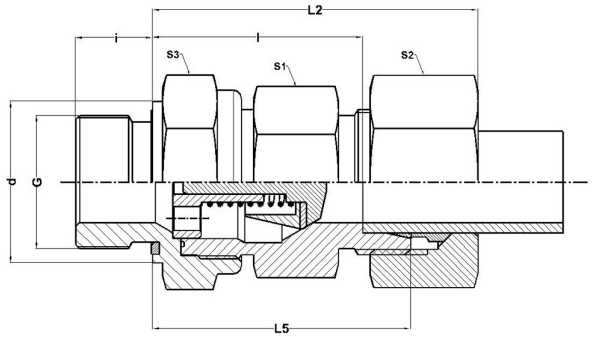

Type Designation	SERIES	PN bar(psi)	Tube OD	G	kg per 100St. Kg per 100pcs. Kg per 100p.	d	L2	L5	l	i	S1	S2	S3	Ã˜entspr. Durchlabeta Ã˜outlet Ã˜de passage correspondant
RHZ 6 LR-ED	L	400(5801)	6	G 1/8 A	12.0	13.9	50.5	43	36	8	22	14	27	4.0
RHZ 8 LR-ED	L	400(5801)	8	G 1/4 A	12.0	18.9	50.5	43	36	12	22	17	27	6.0
RHZ 10 LR-ED	L	400(5801)	10	G 1/4 A	10.4	18.9	48.5	41	34	12	22	19	27	6.0
RHZ 12 LR-ED	L	400(5801)	12	G 3/8 A	14.0	21.9	53.5	46	39	12	22	22	27	7.5
RHZ 15 LR-ED	L	400(5801)	15	G 1/2 A	19.5	26.9	56	48	41	14	27	27	32	11.0
RHZ 18 LR-ED	L	400(5801)	18	G 1/2 A	23.0	26.9	61.5	53	45.5	14	27	32	32	11.0

RHZ 22 LR-ED	L	250(3626)	22	G 3/4 A	47.0	31.9	69.5	61	53.5	16	46**	36	41**	18.0
RHZ 28 LR-ED	L	250(3626)	28	G 1 A	52.5	39.9	71	62	54.5	18	46**	41	41**	20.0
RHZ 35 LR-ED	L	250(3626)	35	G 1 1/4 A	132.0	49.9	88.5	77.5	67	20	60	50	70	29.0
RHZ 42 LR-ED	L	250(3626)	42	G 1 1/2 A	140.0	54.9	87.5	75.5	64.5	22	60	60	70	29.0
RHZ 6 SR-ED	S	400(5801)	6	G 1/4 A	13.0	18.9	52.5	45	38	12	22	17	27	4.0
RHZ 8 SR-ED	S	400(5801)	8	G 1/4 A	12.0	18.9	50.5	43	36	12	22	19	27	5.0
RHZ 10 SR-ED	S	400(5801)	10	G 3/8 A	13.5	21.9	53.5	45	37.5	12	22	22	27	7.0
RHZ 12 SR-ED	S	400(5801)	12	G 3/8 A	14.5	21.9	55.5	47	39.5	12	22	24	27	7.5
RHZ 14 SR-ED	S	400(5801)	14	G 1/2 A	19.5	26.9	59.5	50	42	14	27	27	32	10.0
RHZ 16 SR-ED	S	400(5801)	16	G 1/2 A	23.0	26.9	62.5	53	44.5	14	27	30	32	11.0
RHZ 20 SR-ED	S	400(5801)	20	G 3/4 A	47.0	31.9	73	62	51.5	16	46**	36	41**	16.0
RHZ 25 SR-ED	S	250 (3626)	25	G 1 A	54.0	33.9	77	65	53	18	46**	46	41**	20.0
RHZ 30 SR-ED	S	250 (3626)	30	G 1 1/4 A	86.0	49.9	87	74	60.5	20	50	50	55	24.0
RHZ 38 SR-ED	S	250 (3626)	38	G 1 1/2 A	143.5	54.9	96	81.5	65.5	22	60	60	70	29.0

HYDROMATIK
connections par excellence

Valves

SHUT OFF VALVE - INLINE | SHVG

DESCRIPTION

SHUTT OFF VALVE MODEL SHV

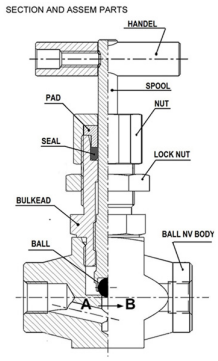

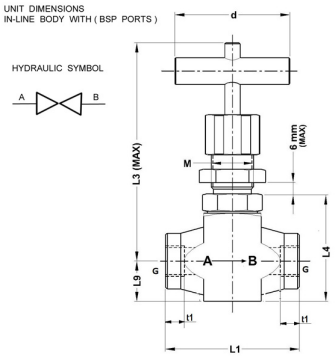

MODEL CODE IN-LINE	G	L1	L3	L4	L9	d	t1	S	M
SHVG02-2.0	G 1/4	70	110.5	54.5	21.0	64	14	30	M22X1.5
SHVG03-2.0	G 3/8	70	110.5	54.5	21.0	64	14	30	M22X1.5
SHVG04-2.0	G 1/2	77	110.5	54.5	21.0	64	17	30	M22X1.5
SHVG06-2.0	G 3/4	93	122.0	71.0	27.0	84	17	36	M26X1.5
SHVG08-2.0	G 1	93	122.0	72.0	27.0	84	18	46	M26X1.5
SHVG10-2.0	G 1-1/4	162	162.0	105.0	51.5	120	22	60	M42X2.0
SHVG12-2.0	G 1-1/2	162	162.0	105.0	51.5	120	24	60	M42X2.0

HYDROMATIK
connections par excellence

Valves

SHUTTLE VALVE | SHUTTLE VALVE

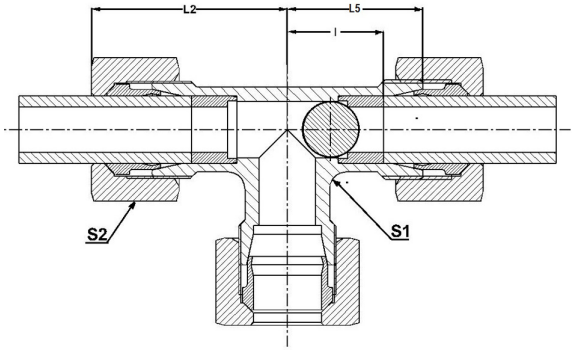

Type Designation	SERIES	PN bar(psi)	Tube OD	L5	L2	l	S1	S2
TWS 8L	L	250(3626)	8	21	29	14	14	17
TWS 10L	L	250(3626)	10	22	30	30	15	19
TWS 12L	L	250(3626)	12	24	32	32	17	22